Discrete Raise Low Function

Simon - 2024-09-27 - easYgen-3000XT

1. Introduction

The “Discrete raise low function” is providing a function to vary setpoints according to binary signals of LogicManagers.

Most commonly push-buttons are used to energize digital inputs of the control: These inputs are assigned to the LogicsManager for the raise / low function.

As long as a push-button is pushed the corresponding setpoint will be raised or lowered with a configurable ramp rate.

Frequency and voltage can be adjusted within the configured operating limits.

Active power may be adjusted between 0 and the configured load control setpoint maximum “5523 Load control setpoint maximum”.

The power factor may be adjusted between 0.71 leading and 0.71 lagging.

The following chapters give an example how to configure the application mentioned before.

2. Example

The example shows the configuration for variing the setpoints by four push-buttons connected to the digital inputs 9 - 12.

The following configuration steps are required:

- Assign the analog variables for discrete setpoints to the AnalogManagers for frequency, power, voltage and PF setpoints.
- Assign digital inputs 9 - 12 to the LogicManagers “Discrete f/p+”, “Discrete f/P-”, “Discrete V/PF+”, “Discrete V/PF-”.
- Configure ramps (speed for raise / lower [%/s]).

2.1. Frequency and load setpoint via discrete raise / low function

In this example digital input 9 will be used to lower and digital input 10 will be used to raise the frequency / load setpoint.

2.1.1. Configuration of the analog manager for frequency setpoint 1: SP1

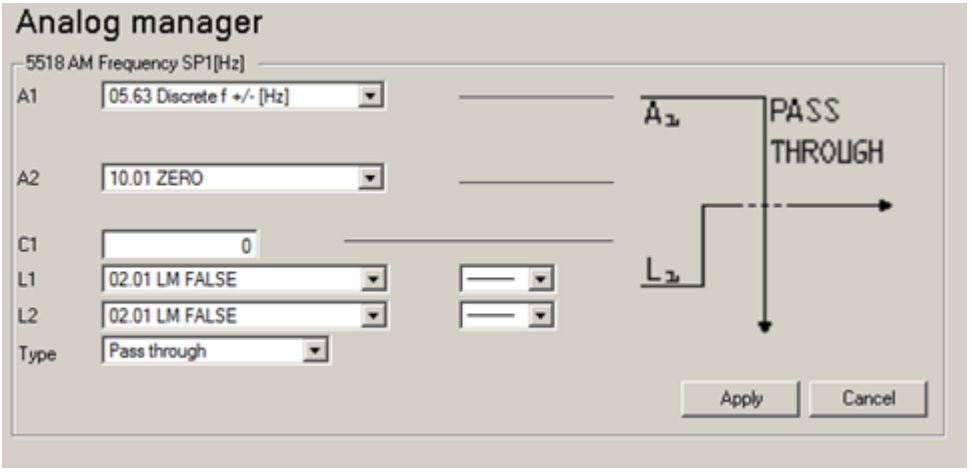

Frequency setpoint SP1 source is assigned to 05.63 Discrete f +/- [Hz]

2.1.2. Configuration of the analog manager for load setpoint 1 SP1

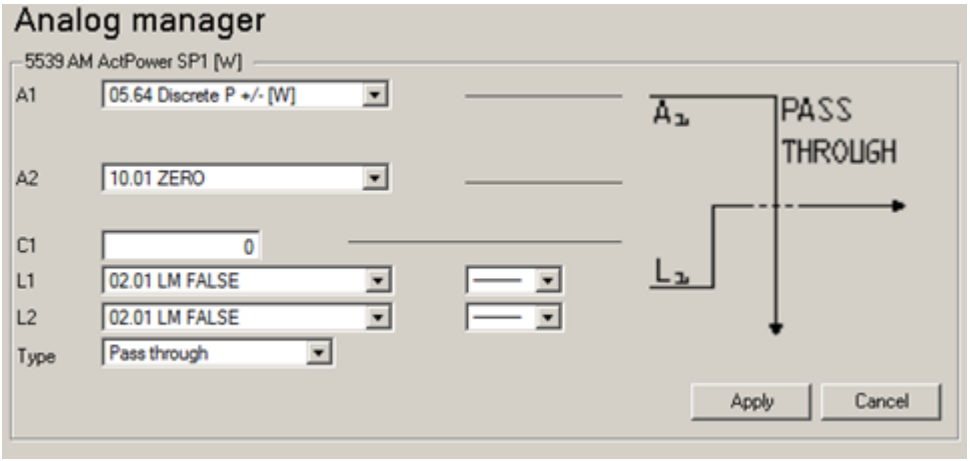

Power setpoint SP1 source is assigned to 05.64 Discrete P +/- [W]

(starting from revision 1.15: to 05.14 Discrete P +/- [**k**W])

2.1.3. Configuration of LogicManagers (LM) of frequency / power discrete raise / low function

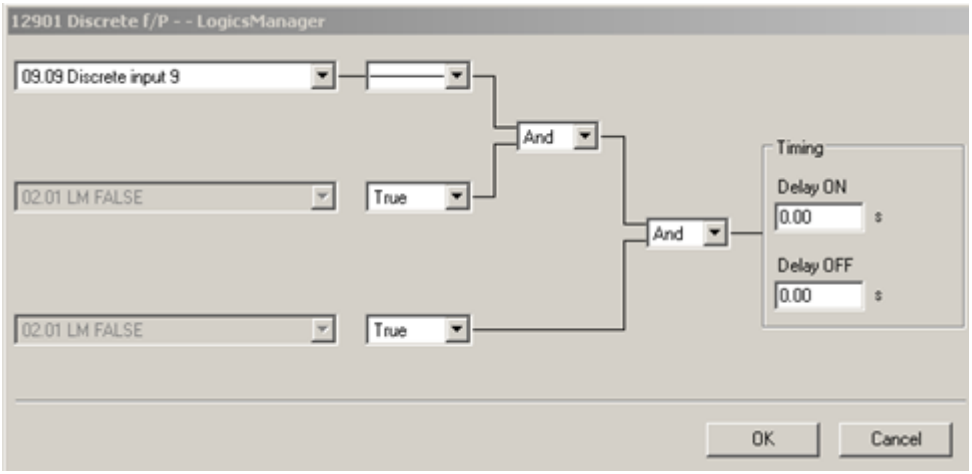

Digital input 9 is assigned to LM for frequency and load discrete lower.

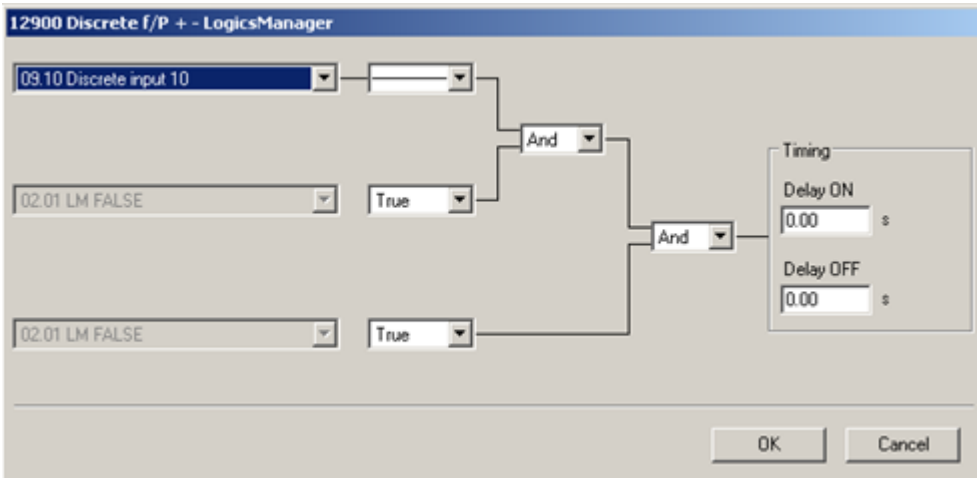

Digital input 10 is assigned to LM for frequency and load discrete raise.

Remark: A “Delay ON” time unequal zero can be used to adjust the response of the corresponding buttons.

2.1.4. Configuration of the ramps for frequency / power discrete raise / low function

The following parameters define the ramp rate for raise and lower. E.g. if the push button DI 8, f/P-) is pushed continuously for 3 s the power setpoint will lower at 3 * 3 % = 9 % in this time.



2.2. Voltage and PF setpoint via discrete raise / low function

In this example digital input 10 will be used to lower and digital input 11 will be used to raise the voltage / PF setpoint.

2.2.1. Configuration of the analog manager for voltage setpoint 1: SP1

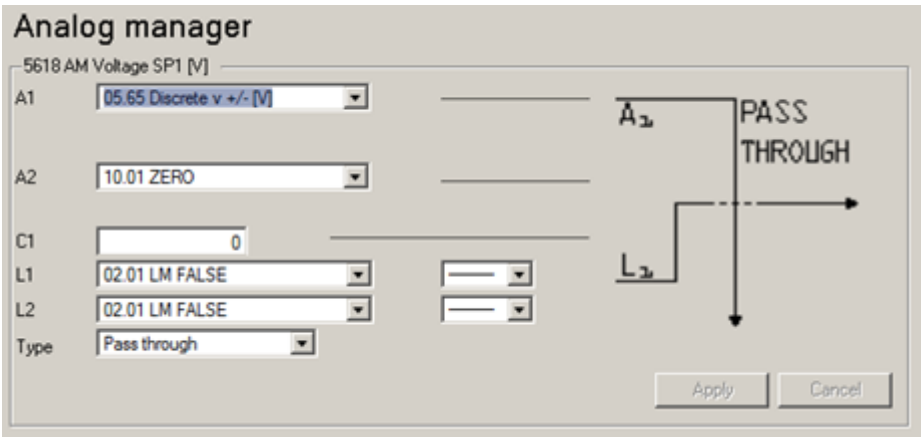

Voltage setpoint SP1 source is assigned to 05.65 Discrete V +/- [V]

2.2.2. Configuration of the analog manager for PF 1: SP1

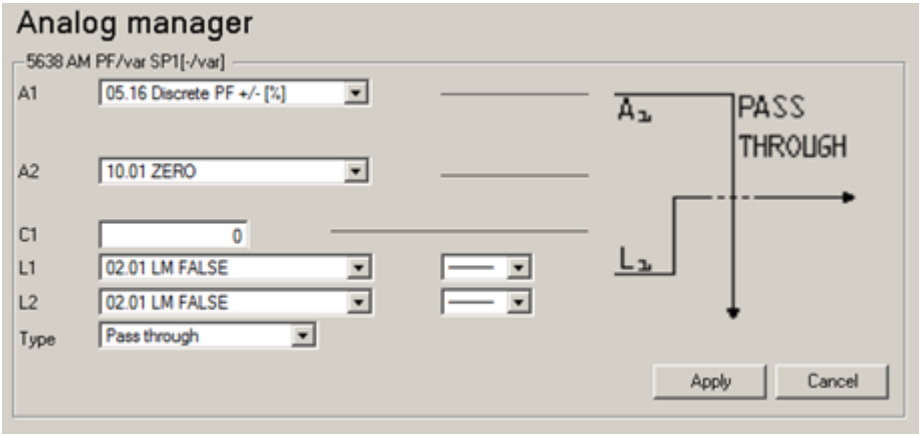

PF setpoint SP1 source is assigned to 05.16 Discrete PF +/- [%]

2.2.3. Configuration of LogicManagers (LM) of voltage / PF discrete raise / low function

Digital input 11 is assigned to LM for voltage and PF discrete lower.

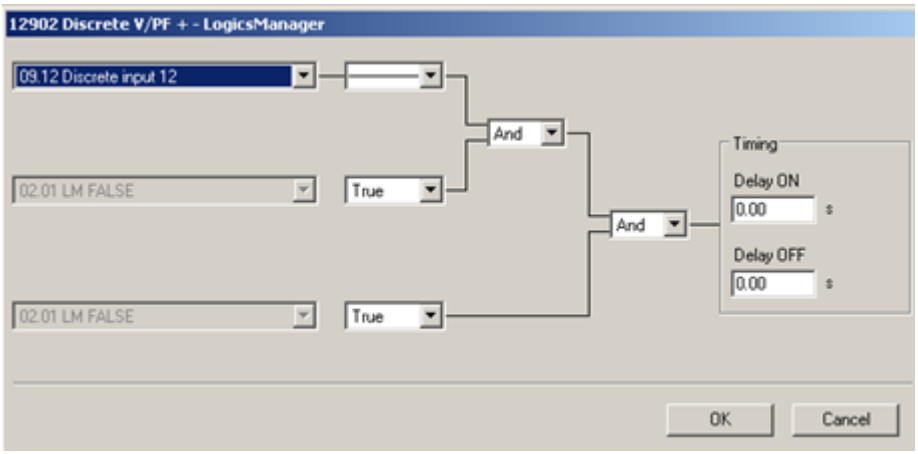

Digital input 12 is assigned to LM for voltage and PF discrete raise.

2.2.4. Configuration of the ramps for voltage / PF discrete raise / low function

(Function of these parameters analog to chapter 2.1.4)



3. Initial values of the setpoints after changing the operation modes

3.1. Change from stop to manual or automatic

If the operating mode is switched from stop to manual or automatic the raise / low setpoints will be initialized like the following:

P: 0,

PF: 1

f: rated frequency

V: rated voltage

3.2 Change from manual to automatic

If the easYgen is in state “In operation” and the operating mode is switched from manual to automatic, the raise / low setpoints will be initialized like the following:

P: current measured value,

PF: current measured value

f: rated frequency

V: rated voltage

3.3 Change from automatic to manual

If the easYgen is in state “In operation” and the operating mode is switched from automatic to manual, the raise / low setpoints will be initialized like the following:

P: current measured value,

PF: current measured value

f: current measured value

V: current measured value